Technical Data Sheet

COLTRI COMPRESSORS

EFFICIENT LINE

ERGO 280 DY FA

DIESEL

Contact

Maximum efficiency in motion

Practical and lightweight, **ERGO 280 DY FA** combines robustness and great operational efficiency. Equipped by a powerful pumping unit, powered by Yanmar diesel motor. There are two connections for high pressure hoses (from 232 to 330 bar) and a Maxifilter filter system. The C-Monitor, the digital hour meter and the remote charging panels are avaible as optional.

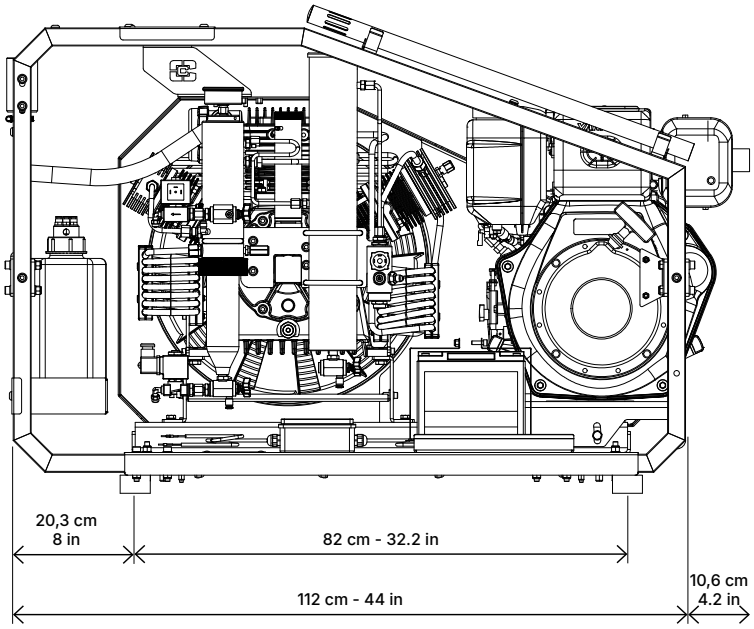

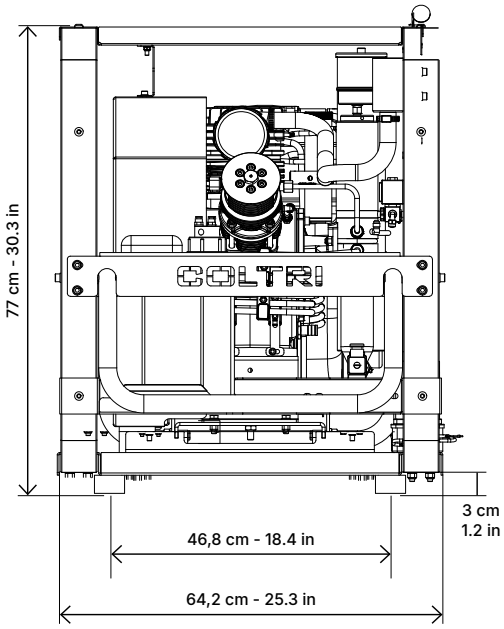

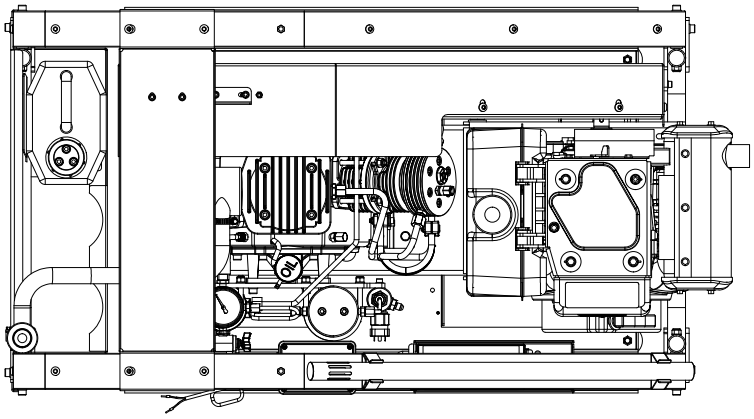

2026 © COLTRI

Technical data

Type of gas	Breathing air EN 12021
Intake pressure	Atmospheric / max 300 millibar
Working pressure	232 bar / 300 bar / 330 bar
Max working pressure	420 bar
Permissible ambient temperature range	-10° C ÷ +40° C
Permissible altitude	0 ÷ 1.500 m SLM
Max permissible tilt	6°
Oil	Synthetic Coltri Oil ST 755
Oil change interval	1 year / 1.000 h
Frame	Steel - Colour Black RAL 9005 - Powder coating painting - Scratch proof

Compressor

	280 DY FA
Charging rate Measured during 10 liters cylinder filling from 0-200 bar tolerance +/- 5% at + 20 ° C ambient temperature.	280 l/min 16.8 m^3/h 9.9 cfm
Purification System	Maxifilter
Cooling air flow	1.890 m^3/h
Weight[1]	164 kg - 361.6 lb
Dimensions (W x D x H)[1]	112 x 64,2 x 81,3 cm - 44.1 x 25.3 x 32 in

1 Standard model. Dimensions and weight may vary depending on accessories.

Engine

	280 DY FA
Type	Diesel Yanmar FA
Power	6,8 kW - 9.2 Hp
Speed (RPM)	3.600

Technical data pumping unit MCH 16

	280 DY FA
Charging rate Measured during 10 liters cylinder filling from 0-200 bar tolerance +/- 5% at + 20 ° C ambient temperature.	280 l/min 16.8 m^3/h 9.9 cfm
Speed (RPM)	1.385
Number of stages	3
Number of cylinders	3
Cylinder bore 1st stage	95 mm
Cylinder bore 2nd stage	38 mm
Cylinder bore 3rd stage	14 mm
Stroke	40 mm
Direction of rotation (from flywheel side)	Counter clockwise (left)
Drive type	V-belt A type
Intermediate pressure 1st stage	~ 6 bar
Intermediate pressure 2nd stage	~ 45 bar
Oil sump capacity	1,8 liters
Max intake pressure	1,3 bar (absolute) / 300 millibar - 4,35 psi

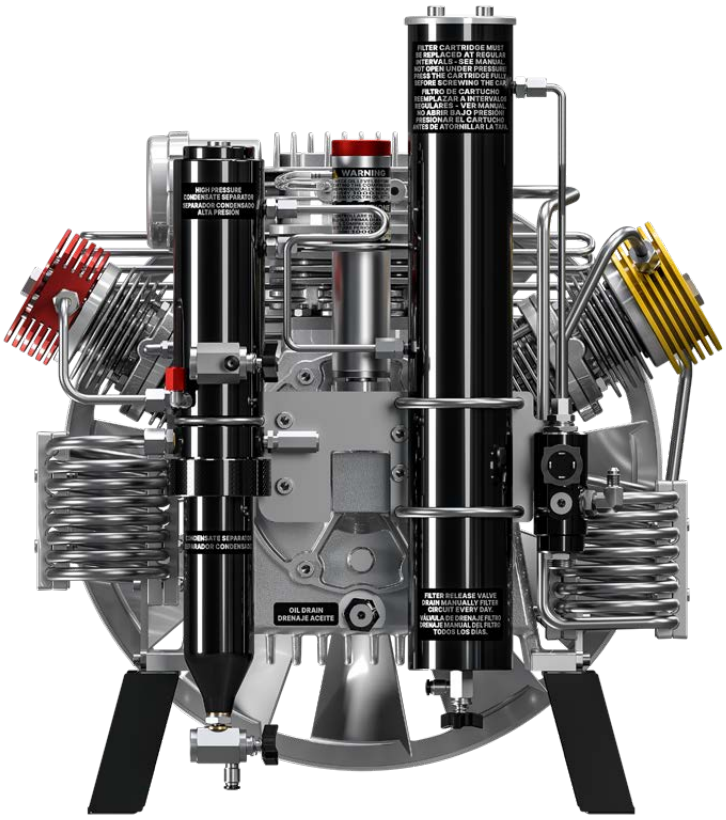

Splash lubrication with conrod pin immersed in oil

Suction filter: 10 µm

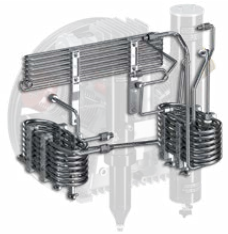

Pipes, fitting and nuts in stainless steel AISI 316

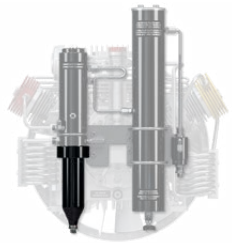

Intermediate condensate separator after the second stage

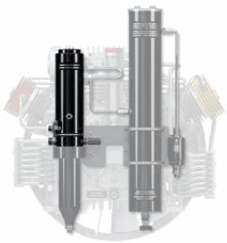

High pressure final condensate separator

Safety valves after each stage of compression

Die-cast aluminium cylinders with barrel coating in nicasil

Forged aluminum connecting rods

Forged steel crankshaft

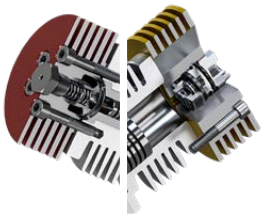

Stainless steel second and third stage valves

Roller Bearings for intensive work load

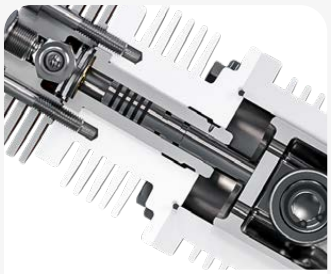

Third stage in tempered steel with 5 piston rings in special cast iron

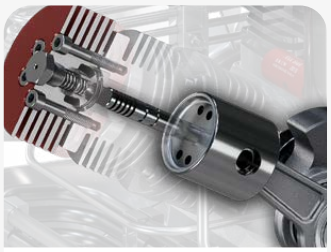

Second and third stage with pushing pistons to eliminate lateral forces on the pistons

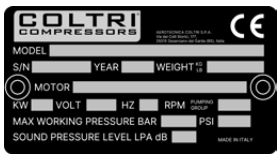

CE certification

Standard equipment

Purification system Maxifilter

MAXIFILTER cartridge repackable or disposable

Purification system	Maxifilter
Operating pressure (Standard)	250 bar / 330 bar / 360 bar
Operating pressure max. (PS)	420 bar
Processable air capacity (air inlet temperature in the filter 20° C at 300 bar)[1]	890 m^3

1 When using a filter cartridge without HOPCALITE CO CATALYST.
If a cartridge with CO removal is used, the process air capacity is reduced by about 20%.

Condensate separation system

- Interstage separator after 2nd stage
- Final separator for the removal of oil/water condensate
- Final safety valve, fitted to separator housing
- Pressure maintaining/non return valve

Contamination	Maximum content as per DIN EN 12021:2014	Air quality*
H_2O	25 mg/m	≤ 10 mg/m
CO	5 ppm(v)	≤ 4
CO_2	500 ppm(v)	≤ 500
Oil	0,5 mg/m	≤ 0,5 mg/m

* Measured at our facility using ASCO HORA 160 ANALYZER.
- Only with special filter cartridge with HOPCALITE CO CATALYST. and up to a maximum concentration of 25 ppm CO in intake air. The compressed clean breathing air then contains a maximum of 5 ppm CO.
- The level of CO_2 in the intake air must not exceed the maximum level of CO_2 as per EN 12021:2014.
- Reported values exceed standards:
  - ISO 8573-1 class 3 for particles
  - ISO 8573-1 class 1 for humidity
  - ISO 8573-1 class 1 for oil.

2026 © COLTRI

Filling connection

2 Filling connection to choose from: DRV DIN 232 bar with gauge, DRV INT/YOKE 232 bar and DRV DIN 300 bar with gauge.

Electric starter with battery

Automatic shutoff with pressure switch

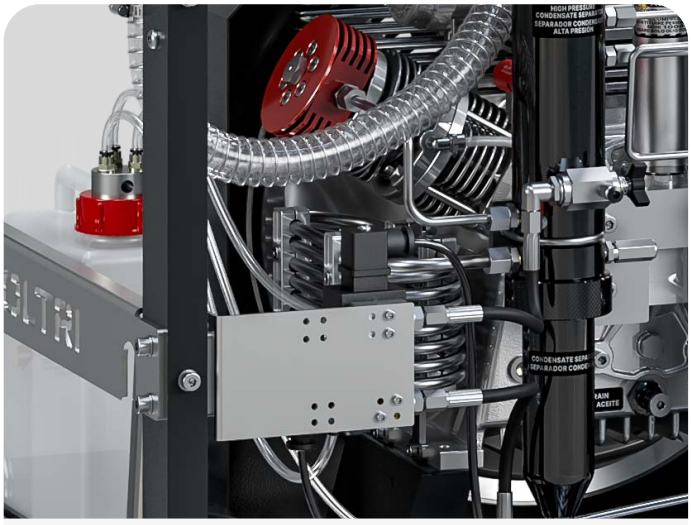

Automatic condensate drain

Optional

C-Monitor

Vibration-activated digital hour meter

Application fields

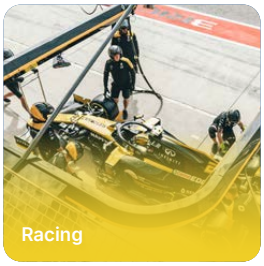

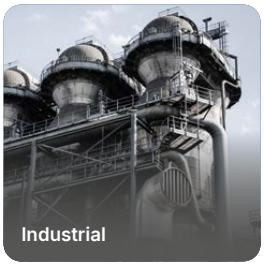

Aerotecnica Coltri S.p.A.

Via dei Colli Storici, 177
25015 Desenzano del Garda - Brescia - Italy

Tel. +39 030 9910301
+39 030 9910297

info@coltri.com

DT-TDS-ERGO-280DYFA-26-V2

QUALITY SYSTEM CERTIFICATION DNV ISO 9001

ENVIRONMENTAL SYSTEM CERTIFICATION DNV ISO 14001

SAFETY SYSTEM CERTIFICATION DNV ISO 45001

Printed on paper from
sustainably managed forests

Visit our showroom in Virtual Reality

coltri.com

coltri.com/showroom

COLTRI® COMPRESSORS